Operating Instructions

Installation Guide

MPPT inverter OPL 9AC

for heating coils 230 VAC with AC output

Options 2 kW, 3 kW, 4 kW, 5 kW, 6 kW

Manufacturer:

SolarEco
Harantova 1172
509 01 Nova Paka
Czech Republic

tel. +420 910 127 250
email@solareco.cz
www.solareco.cz

Caution: Read this manual carefully before installing the device.

The manufacturer assures that he has issued a declaration of conformity for this product in accordance with Act No. 22/1997 Coll. and Government Regulations No. 281 and 282 and ČSN EN 61439-3 and ČSN EN 61439-1 ed.2 including Amendments and Supplements.

Obsah

Inverter use

The OPL 9AC MPPT inverter allows to connect standard heating appliances with a resistive coil (for connection to a conventional 1-PE-N/AC 230 V/50 Hz distribution network) to a DC power source that creates off-grid systems of photovoltaic (PV) panels.

The inverter is not designed to connect heat-generating appliances that contain, besides resistive loads, also inductive load (fans) or pure induction load - motors. Do not connect these appliances to the inverter because they will be damaged and this damage is not covered by the manufacturer's warranty.

Supported appliances

To the inverter, it is possible to connect all heating appliances with heating resistor coil, that do not contain induction elements - fan motors, etc.

Typical appliances include domestic hot water boilers, convector heaters, oil heaters or storage heaters, infrared heaters and other resistive coil electric appliances designed for voltage operation

from a common distribution network (1-PE-N / AC 230 V / 50 Hz) without any additional modifications. Connecting non-resistive electrical appliances (motors, transformers, etc.) to the inverter will cause the inverter will be destroyed and may result also in damage of the connected appliance. The manufacturer is not responsible for damages to appliances that are not intended to be connected to the inverter, and if this product is damaged due to inappropriate installation, the consumer will also lose the warranty on the product.

Heat appliances, designed to be connected to a regular distribution network, cannot work reliably on DC voltage without special modifications. These devices include thermostats and other switching elements that cannot permanently expand the DC circuit, as with the expansion of the DC power circuit, excessive contacting of the switch contacts occurs with several disconnections. It means that for a permanent operation of normal appliances, a transformation element - the MPPT inverter OPL 9AC must be inserted between the DC voltage and the AC voltage appliance.

Inverter Advantages

The inverter keeps a maximum power of PV system and it will deliver a maximum power that photovoltaic panels can deliver under instantaneous conditions to the appliance (heating coil). The design of the inverter increases the PVS performance by up to 35% compared to other concepts, with an efficiency exceeding 99%.

A unique feature that other inverters on the market do not have is the highly effective use of profits at low sun irradiation levels (high cloudiness). Even under these extreme

conditions, the inverter can supply power 1 watt and more to the system. These low energy additions can periodically supplement heat losses in conventional DHW boilers. For normal boilers, the loss of energy in year-round operation represents up to 15% of the cost of DHW production. Generally, the current DHW boilers have a very low thermal insulation in order to reduce the space requirement, which increases the yearly cost balance for DHW heating from the distribution network.

The inverter does not need any external power to operate. Its operation is fully ensured by PVS energy.

The inverter is equipped with a sophisticated and automatic PVS parameter recognition to always ensure an optimal power generation.

The inverter is not equipped with any mechanical adjustment element, such as those which occur with other devices of older concepts.

Inverter Description

MPPT inverter OPL 9AC is an electronic device designed to optimize energy gains from photovoltaic panels.

The inverter converts DC voltage from PVS to pulsed alternating voltage (modified 50 Hz frequency sine) and allows to connect conventional electric consumers with resistance load of 1 to 6 kW depending on the type of inverter without the risk of heat damage to thermostat contacts to PVS.

The inverter concept allows to use a steady range of input voltage from 30 to 400 V. It fully supports MPPT function in the voltage range 120 to 350 V.

The device operates on a load-relieving basis, depending on input power. For the correct operation, the Ohm's law must be observed. The heating element must be approximately equivalent to the PVS power. Depending on the power, the width of the modified sine pulse is controlled. When reducing power, the pulses decrease to stabilize the MPP PVS voltage at the inverter input. When increasing the PVS power, the inverter starts expanding the pulses, thus increasing the power to the full possible value of the system or starting to limit the power so that the inverter's design values are not exceeded. Up to 50% PVS power, the inverter can make input more efficient by more than 35%. With higher power, the input is closer to performance. The inverter protects the PV panels against undervoltage and overcurrent. It has built-in thermal and overcurrent protection as well as power protection. The inverter protects the power stage against preload.

An unexpected anomaly not causing damage to the inverter will block the inverter. This state will last till a complete discharging of the main capacitors or till Tl RST. If the user does not intervene, the inverter will come to normal state the next day.

Main parts of the inverter:

- Capacitor block to increase efficiency at low power PVS,
- MPPT block for monitoring maximum power in variable PVS operation conditions,
- Inverter for DC voltage transformation to pulse alternating voltage with variable pulse width (so-called modified sine).

Controls and terminal blocks

The illustration shows the location of important elements such as control buttons, status signaling LEDs. Two white LEDs indicating the presence of output voltage on the load and green LEDs on the connectors that inform about the charged capacitors and the location of the fuse.

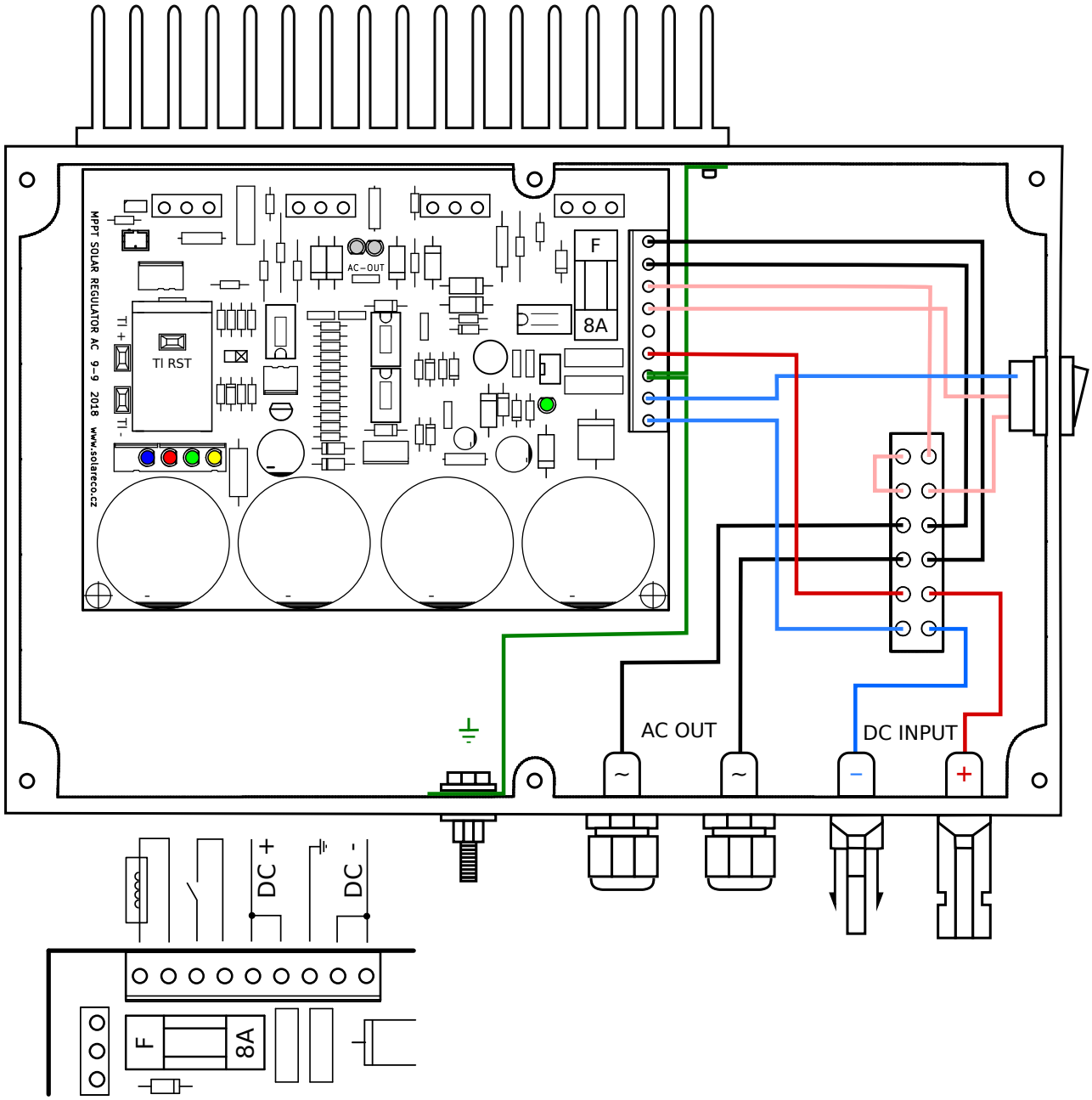

Protection functions of the inverter

The temperature, voltage, output current and power are constantly monitored during inverter operation.

Over-temperature protection – In connection with increasing temperature of the inverter its performance is limited so as not to damage the power part because of exceeding the maximum operating temperature. After the high temperature has elapsed, the inverter automatically switches to full power. The power reduction is gradual and is indicated by a red LED.

Output current and power protection - If the maximum current or power is exceeded during the operation, the inverter will begin to limit the output current and power to reach a design value that is dependent on the design version of the inverter. The maximum outputs for each type are: 2 kW / 9 A, 3 kW / 12 A, 4 kW / 16 A, 5 kW / 20 A, 6 kW / 24 A.

The inverter has built-in protection against low voltage. At low voltages, the inverter does not start - no led (except the source section) is on.

The inverter has built-in high-voltage protection. In high voltages, the power section is not energized to avoid damage to the connected device or inverter.

The inverter also has short circuit and reverse polarity protection.

All protections are reversible. **If the maximum values for protection are exceeded, the inverter will be damaged!**

Inverter Placement Requirements

The inverter should be placed in a place where water condensation does not occur. The site must be sufficiently ventilated, without increased dust and direct sunlight, which might cause spontaneous overheating of the inverter.

The inverter must be located on a vertical wall sufficiently distant from other room walls or other devices so that the cooler of the inverter might cool itself without forced ventilation. The spacing distances are shown in the figure.

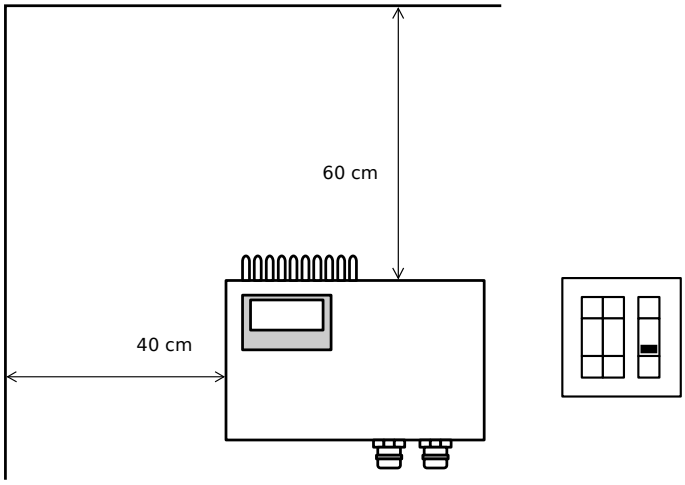

Temperature conditions for inverter operation:	-10 °C ~ 50 °C
Operating relative non-condensing humidity:	max 80%

Inverter Operating system

The inverter generates a power source. It is designed only for work in systems safely separated from the distribution network or other electrical distribution - the so-called island mode of PVS (off-grid).

The grid connection network for the appliance can only be IT or TT. The inverter is not designed to operate in any type of TN network (TN-C, TN-S, TN-CS).

Connecting the inverter to any type of TN network will cause damage thereof and may also damage the grid functions or grid connected appliances. This damage is not covered by the manufacturer's warranty.

Requirements for connection of the PV system

The inverter must be safely separated from the distribution system.

The non-live conductive parts of the inverter must be earthed. Grounding can be done via a grounding terminal and a protective PE conductor. This connection removes possible interference with some types of installations. However, never connect the protective conductor to the PEN distribution network!

The manufacturer recommends the PV panels to be connected to the inverter via a fuse switch, eg OEZ OPVP10-2 (the fuse switch is to be suitably dimensioned according to the PV system, eg 12 A). The fuse switch allows for easier service on the inverter or the power supply to the inverter. Install a surge arrester, eg OEZ SVBC-DC-1005-3V-MZ, into the circuit between the PV panels and the fuse switch. Place a properly dimensioned circuit breaker, eg OEZ LTE-13C-2, into the circuit between the inverter and the load. These additional features ensure significantly higher system reliability and robustness to the extreme conditions that may occur on the DC system in the event of a thunderstorm or sudden change in extreme irradiation.

As DC power supply cables to power the PVS inverter, use special SOLAR cables with a cross section of at least 4 mm^2. If the supply cables are longer than 10 m, then use a cross section of at least 6 mm^2. For the lead cables: the larger the cross-section, the better, because the losses in the DC circuit increase much more significantly than in the AC lines. It is always cost-effective and more economical to place the inverter as close as possible to the PVS. In most systems, this will allow not to oversize DC lines while minimizing losses on DC lines.

Use an appropriate type of cable for output from the inverter when supplying AC appliances, as recommended by the device manufacturer. In most cases, a 2.5 mm^2 conductor is suitable for 3 kW load. Here too - a larger cross section will contribute to reducing thermal stress and cable losses. Above all, do not underestimate the cross-section of the cable in the case of cable lengths exceeding 10 m.

PV System Design

When designing an PVS connected to an OPL 9AC inverter, it is always necessary to take into account the Ohm Act, the operating load performance, the PVS power and the maximum power of the inverter.

The design of the system should be done by an expert with experience in off-grid photovoltaic systems. In the system, the PV panels can be series-parallel conected to use the maximum PV panel power, inverter power and the size of the connected load. When making a series-parallel connection, make sure that the protective devices are properly connected and dimensioned.

Examples of PV system configuration

1. FV panely poly/mono crystalline 270 Wp panels (U_{MPP} 32 V, I_{MPP} 8,9 A)

- serial connection of 8 panels in one branch

	FVS 8x 270 Wp	**Inverter OPL 9AC3**	**Boiler OKHE 160**
Maximum Power	P_{MPP} = 2160 W	P_{max} = 3000 W	P = 2200 W
Operational voltage	U_{MPP} = 256 V	U_{MPP} = 120 až 350 V	U = 230 V ± 10%
Operational current	I_{MPP} = 8,9 A	I_{max} = 12 A	I = 9,5 A

2. CIGS 200 Wp PV panels (U_{MPP} 90 V, I_{MPP} 2,2 A)

- 4 parallel branches with 3 panels in series in each branch

	FVS 12x 200 Wp	**Inverter OPL 9AC3**	**Boiler OKHE 160**
Maximum Power	P_{MPP} = 2400 W	P_{max} = 3000 W	P = 2200 W
Operational voltage	U_{MPP} = 270 V	U_{MPP} = 120 až 350 V	U = 230 V ± 10%
Operational current	I_{MPP} = 8,8 A	I_{max} = 12 A	I = 9,5 A

Do not forget to properly handle backflows that can flow through individual branches when you accidentally disconnect a branch.

The PV panels must be installed in accordance with the manufacturer's instructions, including fuses and overvoltage protection mechanisms.

Examples of PVS, inverter, and appliance connections

Off-grid system with one coil

The easiest way is to connect the inverter to a DHW boiler with one heating coil. The connection fulfils the requirement for galvanic separation of the inverter from other networks.

For a suitably sized PVS, this connection allows year-round operation even without a distribution network.

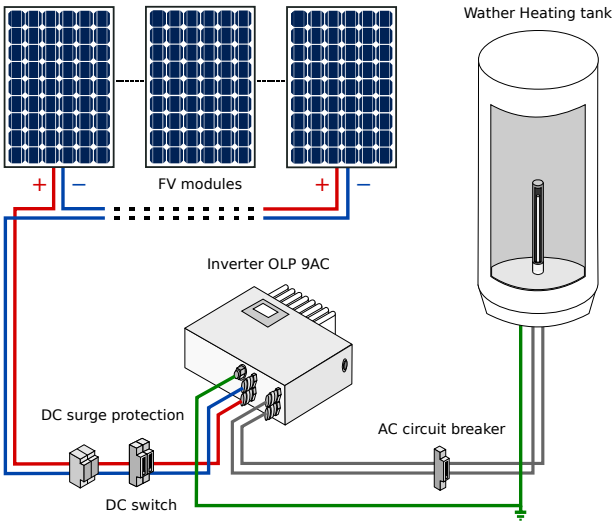

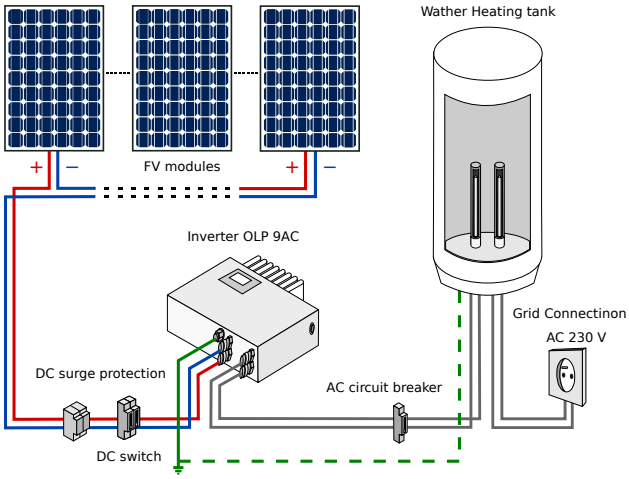

Hybrid system with two coils

Boilers with two heating coils will allow for a year-round operation of low-power PVS and independent DHW heating from the distribution network.

The advantage of this system is mainly in the winter months, when the PVS output does not heat the DHW to the required temperature, but, in spite of this, its energy contribution will cover the thermal losses of the tank.

Hybrid system with one coil and HDO switch

A inverter may be retrofitted with a switch, which may ensure year-round operation of low-energy PVSs and, as well, additional heating of DHW from the distribution network.

The system is set so that if the tray does not warm up to the set temperature, there will be automatic additional heating from the distribution of the HDO night mode cycles.

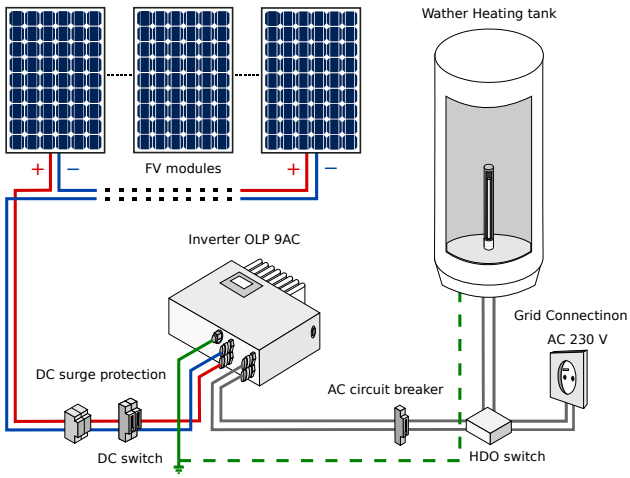

Safety precautions

Do not manipulate the inverter while any LED light is on! The inverter uses a large capacitance of high voltage capacitors, which remains charged long after disconnection. Fully charged capacitors can produce up to 500 A of reverse or short-circuit current for several ms. This equipment poses a great deal of skill when setting the inverter in operation.

The appliance must only be installed by a suitably qualified person (CZ – Decree No. 50/1978 Coll.) and while adhering to all safety regulations.

The electrical installation must respect and meet the requirements and regulations in the country of use!

Caution, the internal fuse of the inverter is connected neither to the input nor to output power circuit! The internal fuse serves only to protect the device against shock-absorbing of capacitors, which improve the efficiency of the low-power PVS inverter. To protect the connected appliances, connect a suitable AC circuit breaker to the circuit.

Caution, the inverter has no main switch for disconnecting from the DC voltage PVS source. The inverter must be disconnected externally e.g. by a suitable fuse switch. When the inverter is disconnected from the PVS voltage, there is a dangerous voltage within the inverter even several minutes after disconnection.

Setting in operation

The inverter is not a stand-alone appliance and can only be set in operation by a person with the appropriate professional qualifications and skills. The installation must comply with the applicable electro technical standards in the country of use. In case of failing to comply with this condition, the manufacturer assumes no warranties and the customer automatically waives the warranty.

Installation procedure

1. Disconnect the thermostat / circuit breaker.
2. Connect the appliance to the inverter (resistive load - boiler for DHW heating, etc.).
3. Connect the PV panels and observe the connection polarity (DC + and DC-). Never connect the PV panels sooner than the appliance!
4. Check the tightening of all terminals of the interconnections.
5. Connect the thermostat / power switch terminal. Caution! Terminal blocks for the thermostat / circuit breaker are not galvanically isolated from the inverter circuit, and very high DC voltages can occur, if the PV panels are connected.

6. The inverter automatically starts when the thermostat / circuit breaker is connected, so use a fuse switch between the PV panels and the inverter.

Inverter behaviour during setting in operation (first run)

1. The first time you run after installation (or if there is any service intervention), the inverter switches to the state of the PV system identification. This is signaled by regular green LED flashes. The identification takes approximately 15 to 30 s and its length depends on the PV system conditions. In extreme cases, even minutes can be achieved. The maximum identification time is limited to 15 minutes.
2. Under the conditions of the PV system, the situation according to item 1 may be repeated several times in rapid succession or a situation with a longer time span of up to several days may occur. The time for repetition depends entirely on the conditions of the PV system.
3. In other cases, the inverter will be triggered directly, which is signaled by permanent green LED and flashing or permament of blue LED. The inverter gives power output according to the state of the PV system.
4. Sometimes there may be a delay in switching on the green LED (about 10 s) after switching on the fuse switch. This usually occurs when the capacitors in the inverter are completely discharged. In this case, the inverter is waiting for the PV system to stabilize. Once the conditions have been stabilized, the inverter starts spontaneously.
5. Sometimes there may be a delay in turning on the green LED (about 10 s) after switching on the fuse switch. This usually occurs when the capacitors are completely discharged. In this case, the inverter waits till the PV system stabilizes. Once the conditions have been stabilized, the regulator starts spontaneously.

Recommendations for the first run

Perform the first run in good PV system irradiance saturation. If possible, select the starting period of the midday period with sufficient PV plant power at a level of at least 1/3 of nominal power. Avoid first launching during morning dawn or evening twilight. The first run during this period may prolong the time of recognizing the system parameters and delaying the moment of full use of PV power in a period of very good sunshine.

If the first-run situation does not allow you to wait for adequate sunshine, for example in winter months with permanent clouds, repeat power of the inverter at full sunshine, or, as the case may be, select the status to re-identify the PV system at the appropriate time using the learned value erasure function.

Inverter states

1. Automatic inverter run

Basic working mode, which is signaled by the permanent green LED. In this mode, the inverter operates completely automatically and permanently adapts the output power of the PV panels for efficient use in the consumer (resistive load). In this state, the inverter uses the learned system values to ensure the maximum output power and efficiency transferred from the PV panels to the load.

2. Temporary manual mode

It is used for service or revival purposes and has the character of temporary mode. In manual mode, the output power of the inverter is directly controlled by the operator, and there is no optimization. Changing the output power has a direct effect on the voltage and current on the PV system. Therefore, the operator must be attentive to ensure that the limit values of the inverter or the PV system are not exceeded (e.g. by short-circuit current) during manual operation.

Inverter transits to manual mode under condition of normal operation after pressing any button. Manual mode is signaled by regular green LED flashes. The inverter gets out of manual mode automatically after 10 seconds, when none of the buttons has been pressed. Tl + adds power (reduces PVS voltage) and Tl- reduces power (increases PVS voltage). In case of “step-by-step” pressing of only one button, rate of increase or decrease of power depends upon the number of presses. This mode allows you to quickly adjust the output power by making a big change and, as well, to perform fine-tuning after a major change. This is done by pressing e.g. Tl+, Tl- once, and subsequently Tl+ twice. The inverter adds a large portion of the power (10x Tl+), clears large power difference (Tl-), and repeatedly slightly adds power (2x Tl+) or vice versa.

3. Service mode

This condition is signaled by regular yellow LED ●○●○ flashes. This mode is intended to be commissioned exclusively by a service technician, and a normal user does not have the opportunity to encounter it under normal conditions (see the Service mode).

Status indication during inverter run

The state of the inverter is signaled by LEDs with different colours.

1. **Green LED** – indicates main inverter status
   - A permanent light ●●●● signalizes the operation in automatic mode.
   - Regular flashing ●○●○ indicates temporary manual mode after any button has been pressed, it may also indicate the off-state of the output, when the inverter has left the automatic mode in connection with reduction of voltage on the PV panels, the system identification process or a state when the consumer (resistive load) is disconnected.
   - LED of ○○○○ means stopped inverter because of low voltage in the system or broken fuse.
2. **Red LED** – indicates status of protection mode or fault
   - A permanent light with short flashes always indicates a fault:
     - ●○●●●●●●●● one flash indicates a short-circuit at the output or a permanent overcurrent protection overrun
     - ●○●○●●●●●● two flashes indicate that the allowed temperature has been exceeded
     - ●○●○●○●●●● three flashes indicate a faulty temperature sensor,
     - ●○●○●○●○●● four flashes indicate overvoltage overrun.
   - Periodic flashing of the type ●○○○○○○○○○ to ●○●○●○●○○○ indicates the power limit for the increased temperature of the inverter, where ● indicates a short flash and ○ a time lag without light. Each flash indicates reduction in power by 20%.
   - Regular flashing ●○●○ syndicates high overheating and power limitation by 100% (inverter stop). After cooling, the inverter spontaneously sets off.
   - Irregular flashing ●○○○●○●○○○ indicates continuous operating mode at maximum working current or power.
3. **Blue LED** – indicates the size of the output quantity
   - Periodic flashing ●○○○○○○○○○ up to ●●●●●●●●●●, which characterizes the output power, current or opening time of the power section. The type of signalling is dependent on the internal setting and most often it is a signalling of performance. One short flash for a long time means the lowest power and continuous light means the mode of maximum power that was achieved on the system during the inverter's operating time. For output quantities, the current and opening time of the output element are the same.
4. **Orange LED** – additional signalling
   - Permanent light ●●●● can mean power exceeding to more than 1 kW or start the fan to reduce the temperature of the inverter before limiting power.

Deleting learned values

his operation must be performed whenever the power supply parameters (number or type of PV panels) have changed to set the inverter to new optimal values.

Follow the procedure below to clear the learned values.

1. press and hold button reset (Tl rst located on the uP board),
2. press and hold button minus (Tl+ - located on the main board next to the uP),
3. release button reset (Tl rst) - red LED lights ●●●●,
4. release button minus (Tl-) - red LED will flash regularly ●○●○,
5. press button plus (Tl+) - red LED is lighted LED ●●●●,
6. when the button plus (Tl+) is released, the red LED is off, the learned values are cleared and there is automatic restart.

The deletion operation of the learned values can be interrupted at any time by pressing Tl reset. When the reset button is pressed at any time, the inverter returns to its original state and the values are not cleared.

Permanent mode change

The inverter can work in 4 modes. Permanent manual mode, single MPP voltage control mode, true MPPT mode, and dependent inverter mode. Changing the mode is similar to erasing the learned values.

The permanent mode change is as follows:

1. press and hold button reset (Tl rst located on the uP board),
2. press and hold button minus (Tl+ - located on the main board next to the uP),
3. release button reset (Tl rst) - red LED lights ●●●●,
4. release button minus (Tl-) - red LED will flash regularly ●○●○,
5. shortly press button minus (Tl-) - after the release, red LED flashes once and then periodically repeats one flashing,
6. every other short press of Tl minus creates a sequential increase in the number of flashes up to 4 flashes; the next press will indicate one flash and so it will be repeated; the number of flashes corresponds to the mode, in which the inverter will newly work,
7. press button plus (Tl+) - red LED is lighted LED ●●●●,
8. after the button plus (Tl+) is released, the red LED is off, the status of the new mode is saved.

Do not press the button quickly in succession because the new status will only be signaled after the sequence is completed, and it takes some time. Do not hurry at this stage.

The mode change operation can be interrupted at any time by pressing Tl reset. When the reset button is pressed at any time, the inverter returns to its original state and there will be no change to the mode.

The number of flashes corresponds to the following modes of the inverter

1. ●○○○○ Permanent manual mode is for service only and to verify the behavior of the inverter with connected system of PV boards and load. The inverter responds only to the Tl + and Tl- control buttons.
2. ●●○○○ Dependent inverter mode is a mode for the simultaneous operation of two inverters connected to one set of PV panels. In this mode, setting of both inverters is to be different so that both inverters work on the maximum output of the connected load. This mode is still under development.
3. ●●●○○ MPP single-voltage control is a safe voltage control mode where a service technician or user sets the optimal voltage for a given set of PV panels. This voltage can be changed during the season. For the winter period, the voltage can be set higher because the PV panels have, due to the low temperature, shifted optimum MPP point higher on the power curve. In summer, it is possible to set the voltage lower, because the optimum MPP point is shifted downwards due to overheating of panels by solar radiation (panels with increasing temperature lose power). In connection with first setting in operation of this mode, the inverter is waiting for intervention by an operator. The inverter is started by pressing Tl+. The regulated voltage is selected by repeatedly pressing Tl+ or Tl- as required. The resulting voltage must be read by the connected measuring device at the inverter input. After setting the desired voltage, it is advisable to disconnect the inverter from the PV panels with a fuse switch. During this process, the inverter registers the selected voltage and during the next start, the inverter is operating already automatically.
4. ●●●●○ Automatic MPPT mode monitors the maximum power of PV panels in dependence on weather and sunlight. The output power of each PV panel is shown in the following graph. It is clear from the chart that keeping a panel's performance at maximum value under different weather situations is a challenging task.

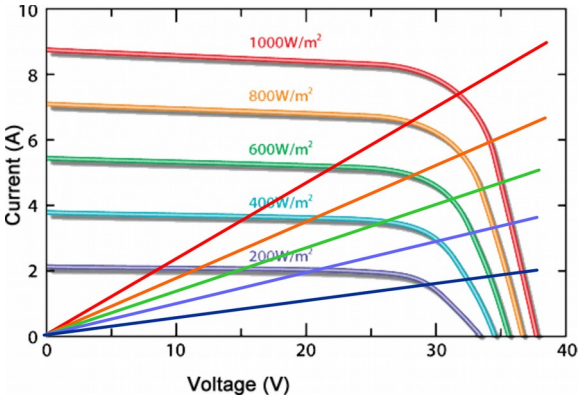

Service mode

The service mode is indicated by a regular flashing of the orange LED ●○●○.

The service mode serves as a quick check of the inverter function. However, end-users cannot set it on their own. In this mode, the inverter is supplied to end-customers, only if the installation is not performed by the customer himself, but by a specialized and trained technician.

The service mode is deleted by erasing operation of learned values. After deleting, it is no more possible to reset the user mode, as the inverter is automatically set to Mode 4 (MPPT).

Storage and handling instructions

The inverter can be stored only in dry, dust-free space without the presence of vapours of acids or other aggressive substances.

When handling, take care to avoid accidental mechanical damage.

Storage temperature:	-10 °C ~ +50 °C
Relative non-condensing humidity:	up to 80% at 21 °C

Defects and their Removal

If the inverter does not start, the white LED is off, there may be several reasons:

- Low voltage on the system that does not allow the inverter to start,
- Damaged fuse (when replacing, be careful, the capacitors may still be energized; first discharge the capacitors safely e.g. with a standard 40 W lamp or wait for at least 30 minutes),
- Very high voltage on the system (the inverter does not start to protect the output stage),
- PV panels may be re-polarized and short-circuited after they have been connected.

If the red LED flashes, there is a fault. If a fault occurs twice in succession, the inverter will be blocked. This situation can be removed only by pressing the RST button on the uP board, or by disconnecting the PV panels with the full discharge of the capacitors, the green LED near the connectors must go out. You will find the type of fault in the Status Signal.

Warranty and Claims

The warranty for the product is 2 years after the date of sale. The warranty card is a tax invoice issued by the seller to the customer. The claim applies to the installation company that has installed the inverter or the manufacturer. If a claim is made against the manufacturer, it is always necessary to attach the tax document.

Disposal instructions

The product cannot be thrown away with domestic waste, and must be collected and treated in accordance with the Environmental Protection Act and, as well, in accordance with Act No. 181/2001 Coll., On Wastes, or following the rules of the country the product has been used.